IMPORTANT! READ CAREFULLY AND KEEP AVAILABLE!

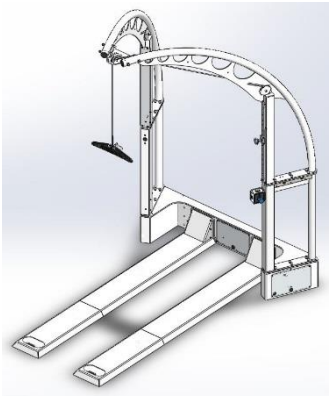

original instructions for use
airwalk® ap / airwalk® lt

unweighting device
body weight support device (BWS)
with optional fall prevention
h/p/cosmos® medical device

product family:	body weight support device
model:	airwalk® ap
article number:	[cos30028]
model:	airwalk® lt
article number:	[cos30028-lt]

development, production, sales & service
h/p/cosmos sports & medical gmbh
Am Sportplatz 8
DE 83365 Nussdorf-Traunstein
Germany
phone +49 86 69 86 42 0
fax +49 86 69 86 42 49
service@hpcosmos.com
www.hpcosmos.com
h/p/cosmos EUDAMED ID:
Economic Actor Manufacturer
SRN: DE-MF-000006147

version of instructions for use
version 1.2, revision 28.06.2021
order-no.: [cos101676-en]

The copyright of this document, media, design, software and intellectual property is owned by h/p/cosmos sports & medical gmbh, except where explicitly stated differently. Warning: All rights reserved. Unauthorized copying, reproduction, hiring, lending, public performance and broadcasting prohibited.

These instructions for use are valid for the original configuration of all devices mentioned above.
Changes of the original configurations of your device (updates, retrofitting of accessories, etc.) may result in invalidity of these instructions for use.
In this case, always consider the last version of these instructions for use as well as the instructions for use of the retrofitted accessories (e.g unweighting vests, shorts and harnesses) and/or combined products, such as for example an h/p/cosmos treadmill.

The latest version of these instructions for use is always available on the h/p/cosmos website:
https://www.hpcosmos.com/en/contact-support/media-downloads/manuals

- It is strictly forbidden to perform any amendments of the technical design, technical specifications, labelling and configurations of this device and the accessories connected to it.
- Any amendments, unauthorized, poor or lack of service / maintenance will result in loss of manufacturer's liability and warranty.

Latest field safety notes FSN and safety warnings are available on the h/p/cosmos website:
https://www.hpcosmos.com/en/safety

Basic-UDI: 4050588004064

UDI-DI airwalk ap: 4050588002305
UDI-DI airwalk ap lt: 4050588002312

product family: body weight support device h/p/cosmos (airwalk)

UDI-DI: 4050588004064
BfArM: DE/CA59/BS 5123/2020-R/Kn initial registration date: October 09, 2020

UDI-DI	model name	article #
4050588002305	**airwalk® ap**	**cos30028**

UDI-DI	model name	article #
4050588002312	**airwalk® ap lt**	**cos30028-lt**

Dear customer,

We would like to express our gratitude for putting your trust in us, in deciding for this top of the range device.
Since 1988 h/p/cosmos® has been developing and manufacturing running machines and accessories for applications in sports, rehabilitation, medicine, diagnostics and science. When it comes to technology, ergonomics, design and safety, we have set extremely high standards for ourselves.

h/p/cosmos' devices are designed for the challenging applications of therapy, diagnostics and training in the medical field and competitive sports. Our declared goal is the improvement of health and performance of your patients and customers.

In order to reach this goal we developed this high-performance device, which naturally bears certain risks due to its power.
The compliance with the safety regulations reduces these risks to a minimum. For that reason, it is very important to read the instructions for use in full before taking the device into operation and pay special attention to the mentioned safety regulations.

Although our devices are very robust and service reduced some maintenance and monitoring has to be performed regularly in order to keep the device in a safe and reliable condition.
The instructions for use describe all the maintenance and monitoring that has to performed by you.
The attached instructions for installation and maintenance describe the processes of installation, detailed maintenance and repair work that must only be performed by trained and authorized technicians who have been certified by h/p/cosmos.

We recommend calling our competent service team or entering into a maintenance contract for a routine service at an interval of 6 or 12 months for standard machines and standard applications. A form for registration of your institution and device is included in the delivery. In order to be able to supply you with the latest technical information and service, it is important for you to fill out the form for registration immediately and send it back via fax, email or mail.

These instructions for use as a firm part of the delivery have to be accessible to the user at any time. They have been written with great care. Should you, however, still find any details that do not correspond with your device, please notify us so that we can correct any mistakes as soon as possible.
Since these instructions for use are subject to alterations without prior notice always refer to the latest version on our website.
E & OE. Errors and omissions excepted.

We wish you a lot of fun and success while exercising and working with this h/p/cosmos device.

Franz Harrer
President & CEO
h/p/cosmos sports & medical gmbh

airwalk ap [cos30028] stand alone device with external air compressor

airwalk ap [cos30028] in combination with an h/p/cosmos treadmill and robowalk expander

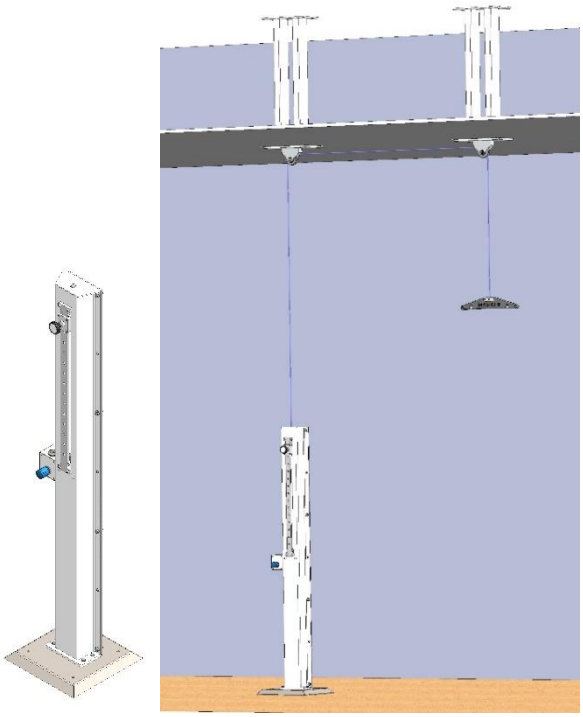

airwalk lt [cos30028-lt] floor mounted pillar with possible installation example via ceiling mounted pulleys

1. Symbols used 6
2. Description 7
3. Intended use 8
4. Residual risk / Side effects (med) 10
5. Forbidden Use / reasonably foreseeable misuse 10
6. General safety requirements 11
7. Emergency dismount / emergency release 12
8. Application body weight support 13
9. Application fall prevention and safety stop (optional) 21
10. Trouble shooting 23
11. Name plate 24
12. Technical data 24
13. Spare parts and consumables 28
14. Intended / expected lifetime 28
15. Disposal 28
16. Installation 29
17. Pneumatic wiring 33
18. Options 36
19. Labelling 39
20. Packing 41
21. Maintenance 42
22. Contact 43

© 1988 - 2021 h/p/cosmos sports & medical gmbh

1. Symbols used

General

CE	CE sign, proof for meeting the essential requirements according to medical device directive 93/42/EEC (MDD), replaced by medical device regulation (EU) 2017/745 (MDR) since May 26, 2021.
	Danger – hazard with high risk! (acc. to ISO 3864-2) In case this hazard is not prevented, it will lead to death or severe injury.
	Warning – hazard with medium risk! (acc. to ISO 3864-2) In case this hazard is not prevented, it might lead to death or severe injury.
	Caution – hazard with low risk! (acc. to ISO 3864-2) In case this hazard is not prevented, it might lead to minor or slight injury.
	Manufacturer (acc. to ISO 15223-1)
2020-09-30	Manufacturing date (acc. to ISO 15223-1)
	Follow instructions for use (acc. to ISO7010-M002)
	Potential equalization (IEC 60445)

Transport

	Fragile, Handle with care (acc. to ISO7000-0621)
	This way up (acc. to ISO7000-0623)
	Keep dry (acc. to ISO7000-0626)
	Centre of gravity (acc. to ISO7000-0627)
	Do not stack (acc. to ISO7000-2402)
	Temperature limitations (acc. to ISO7000-0632)

2. Description

2.1. Design

The h/p/cosmos airwalk ap is an unweighting, also called “body weight support” (BWS), device for partial body weight support (relief) with optional safety stop for fall prevention.
The airwalk ap is made of powder coated steel. The component box is the connection between the rails and the two vertical adapters, which carry the two arches. The two arches carry the cable guide. Like a crane, the device is overlapping the treadmill in a height of approximately 2.75 m.
The unweighting unit is integrated into one of the vertical adapters. A pneumatic cylinder is performing the weight support. The unweighting force is transferred via a static rope to the unweighting bar. The subject is wearing a special vest (harness, optionally chest belt and/or unweighting pants/shorts, which is fixed to the unweighting bar.
In order to support the subject, the unweighting vest is similar to a climbing harness with a high degree of comfort.

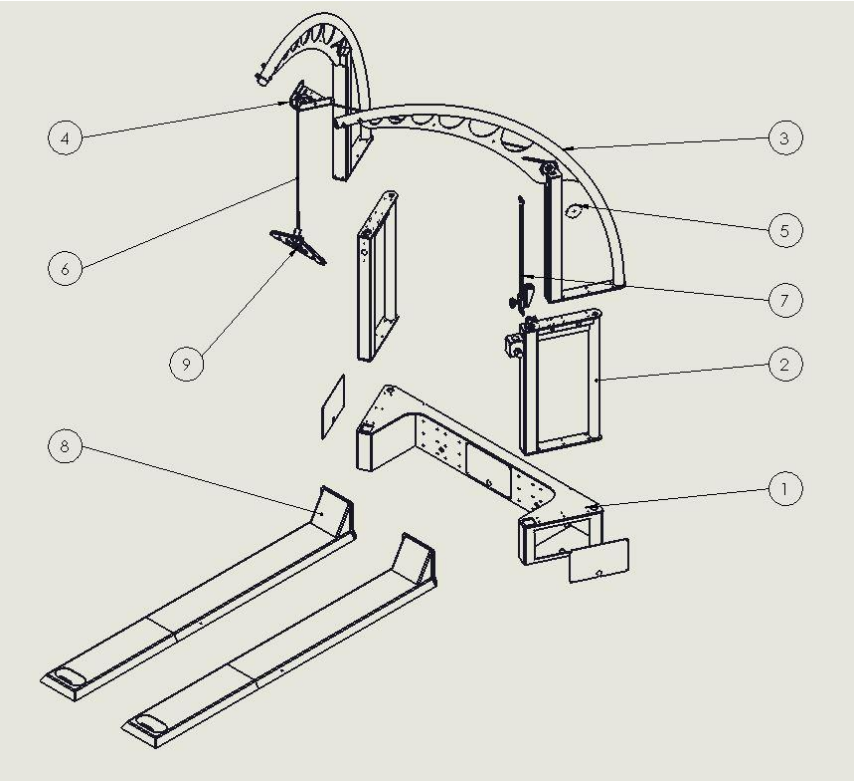

(1) Component box
(2) 2x adapter
(3) 2x arch
(4) Cable guide
(5) Roller + cover
(6) Rope
(7) Adjustable stop
(8) 2x rail
(9) Unweighting bar

2.2. Application

In neurological and also in orthopedic rehabilitation it is important for the patient to start exercising as early as possible. Therefore an individual and optimal unweighting system is crucial for the patient. Further applications are gait training, balance training and functional training under unweighted and/or safe conditions without risk of falling. The h/p/cosmos airwalk unweighting system supports a natural gait pattern. The single-point suspension allows dynamic vertical movement when walking and at the same time allows freedom in movement and body rotations where wanted. Additional fixation straps for further stabilization may be utilized if desired and if recommended for the patient. The unweighting, depending on the progress of therapy, can be adjusted via a hand unit.

3. Intended use

3.1. Intended use

- Body weight support of a subject (during treadmill therapy / training)
- Fall protection of a subject (during treadmill therapy / training)
- Emergency stop in case of falling during treadmill therapy / training
- Balance training under unweighted and/or secured conditions
- Functional movement and gait training under unweighted and/or secured conditions
- Overspeed / hyperspeed and excess frequency training in athletics (only for sports applications)

Prescribed fall prevention device for any application where falling might cause an unacceptable risk (e.g. high speed or special applications, applications with subjects not able to support their weight properly, physically impaired, newly operated hip patients, invasive probes, osteoporosis, etc.)

3.2. Intended operator

- Medical staff only
- that has been carefully trained according to these instructions for use
- that is working according to the prescription of the medical doctor, where applicable and necessary
- The subject is not the intended operator.

But the intended operator is authorized to allow the subject to control the device according to the instructions of the intended operator and under the permanent observation of the intended operator.
This means the operation of the device remains the responsibility of the intended operator at all times, taking the physical and mental condition of the subject into account.
The intended operator has to be within reach of at least one emergency stop / off at all times

3.3. Intended location

- Medical facilities only
- No use at home or in home healthcare environments (acc. to IEC 60601-1-11)
- No outdoor use
- No direct sunlight
- Sufficiently lighted for proper readability of warning, labels, displays and operation elements
- Proper environmental conditions (see “Technical Data”)
- Stationary training equipment: Not moved during use

3.4. Intended duration

- Depending on the prescription of the medical doctor

3.5. Contraindications

<u>Absolute contraindications</u>

(have to be excluded before the treadmill is used)

- Acute myocardial infarction (within 2 days)
- Instable angina pectoris
- Cardiac arrhythmia pathology and/or limited hemodynamics
- Symptomatic massive aortic stenosis
- Uncompensated / uncontrolled heart insufficiency
- Acute pulmonary embolism or pulmonary infarction

- Acute endocarditis, myocarditis, pericarditis
- Acute aortic dissection
- Acute coronary syndrome
- Acute phlebothrombosis of the lower extremities
- Febrile infections
- Pregnancy
- Acute thrombosis
- Fresh wounds e.g. after surgery
- Acute fracture
- Damaged disc or traumatic disease of the spine
- Epilepsy
- Inflammations
- Acute migraine

Relative contraindications

(The application may be started if the possible benefits exceed the risks.
The decision has to be made by the medical doctor before the treadmill is used)

- Left main coronary stenosis
- Main artery disease
- Cardiac valve disease of moderate severity
- Known electrolyte imbalance
- Arterial hypertonia (RR > 200 mm Hg syst. > 110 mm Hg diast.)
- Tachyarrhythmia or bradyarrhythmia
- Hypertrophic cardiomyopathy and other forms of outflow tract obstruction
- Higher degree atrioventricular AV-blocking
- Anemia
- Physical and/or mental disabilities leading to inability to exercise adequately
- Partially invasive medical devices (probes, infusions, catheters, external fixators, etc.)
- Cardiac pacemaker
- Visual impairment (vision < 30% acc. to WHO)

Further contraindications may occur. This has to be evaluated by the medical doctor.
In case of relative contraindications permanent observation of the subject by medical staff is obligatory.

Sources:
http://leitlinien.dgk.org (German Cardiac Society)
www.acc.org (American College of Cardiology Foundation)
www.americanheart.org (American Heart Association)
http://my.americanheart.org/idc/groups/ahaecc-internal/@wcm/@sop/documents/downloadable/ucm_423807.pdf

The above list does not claim to be exhaustive. The decision as to whether a subject is suitable for treatment always comes under the remit of the physician in charge, who has sole medical responsibility for the treatment. As part of this, he must evaluate in particular, in each individual case, possible risks and side-effects of the treatment against the benefit gained from it. In addition, the subject's individual situation plays just as important a role as the basic risk assessment for specific patient groups.
Being a scientific discipline, medicine is subject to constant change in response to new knowledge and progress. It is therefore the task of the physician in charge to continually keep his knowledge up to date by reading the latest scientific literature and to acquire new knowledge during the course of treatment.

4. Residual risk / Side effects (med)

After risk reduction most risks are "acceptable". Only a few risks remain "widely acceptable".
In case fall prevention is not applied or not applied correctly, there are residual risks, such as falling of a person resulting in skin abrasions, bruises, fractures or in worst case even death.
These risks may occur during use as well as when entering or leaving the device.
Furthermore there is residual risk such as unintended overload of the subject caused by wrong operation, wrong assessment, or wrong application of the operator.
The residual risk of trapping of clothes / shoes / fingers / hair or other body parts in moving parts can not be excluded as well. These risks are reduced by safety information within the IFU.
It cannot be excluded that unintended or forbidden use might cause further not yet regarded risks and that already regarded risks might have been estimated incorrectly. It can also not be excluded that the daily use of the medical product might show further risks.
For medical applications such as parallel bar gait training there are alternatives such as overground gait training secured only by the therapist.
However, the benefit of parallel bar gait training contrast to these alternatives is clearly outweighing the residual risk of falling or overload with the known consequences utilizing this medical device.
In this risk analysis the "present state" of the device has been evaluated.
Having carried out the evaluation and validation of the product, the risk of appearance of a not acceptable risk is very low.
The device (it´s construction, it´s function as well as the intended application) does - under normal conditions - not represent any unjustifiable risk for the subject, the user, the operator or third persons.
However, the risk of injury or even death due to a malfunction of this medical device is very low.
In over 30 years of history and with many medical devices on the worldwide market, there has never been such a reported incident.

5. Forbidden Use / reasonably foreseeable misuse

- Do not modify the system and do not connect to other equipment which is not explicitly declared as compatible by all involved manufactures.
- The system must not be used without carefully trained specialist staff and without the staff having been instructed on the safety regulations.
- The subject must interrupt the training immediately if he/she starts feeling sick or dizzy and should see a doctor.
- Subjects with cardiac pacemakers or any kind of physical restriction must see a doctor before using the system and ask for permission.
- In the event of any detected and/or assumed malfunctions and/or defects or unreadable safety warning labels, the device has to be taken out of operation, clearly marked as such and disabled. The supplier and authorized service personnel have to be informed in writing.
- Under no circumstances should a subject/patient or other user be overloaded or overstressed.
- All prohibitions in the chapter “General safety requirements”.
- Other use than the explicitly mentioned intended use.

6. General safety requirements

Danger

- The device has to be inaccessible for unsupervised children (<12 years).
- Incorrect or excessive training may result in injuries to health.
- Always make sure the device is installed on a stable and levelled base.

from standard EN 20957-1

- For any application where falling might cause an unacceptable risk (e.g. newly operated hip patients, invasive probes, osteoporosis, etc.), the chest-belt safety harness cos14903-04-xxx has to be applied additionally.
- Before adjusting the unweighting force always make sure, the rope is not slung around any part of the subject's body.
- The unweighting bar is freely movable; always make sure it does not hit the subject (e.g. the subject's head).
- Before connecting the device to a compressed air supply make sure the hand unit valve is closed, otherwise the unweighting bar will flip up immediately. Therefore unlock turning knob and turn counter-clockwise until stop.
- Disconnect device from compressed air supply for maintenance or cleaning in order to avoid unintended movements.
- Device must only be used by carefully trained, authorized and professional staff.
- Regard limits for max subject weight (see technical data / name plate).
- Regard the instructions for regular disinfection of the unweighting vest / safety harness after every training session (see "application").
- Do not use the device in combination with other than the intended devices (see technical data).
- Do not use the device in case any of the contraindications applies (see list of contraindications).
- Unauthorized modifications, service or maintenance is forbidden and will result in loss of any liability and warranty.
- Do not use the device in environmental conditions other than described in the chapter "technical data".
- In case of unconsciousness the subject has to be released immediately in order to avoid a suspension trauma.
- In case of any wear and tear the device has to be set out of order immediately
- In case of any detected or assumed malfunction, defect or unreadable safety label, the device is to be disengaged, marked and secured against operation immediately. Authorized service personnel has to be informed in writing.
- Use of the device is only allowed for persons correctly secured by the chest belt / unweighting vest. The estimation has to be performed by the therapist or medical doctor.
- Connection to pressurized air supply has to be accessible for any user at any time!
- Always check correct position of the slide with the subject! Subjects' knees must not touch running surface while suspended in vest / harness.
- Before deactivation of air cushion / fall stop mode, make sure the system is not under pressure.
- The intended location must provide a suitable potential equalization condition (e.g. PE-bolt).
- Rope has to be replaced by an authorized h/p/cosmos technician at least every 12 months or earlier in case of any visible or assumed damage.

from risk management

Any serious incident that has occurred in relation to the device should be reported to the manufacturer and the competent authority of the EU Member State in which the user and/or patient is established.
See also EUDAMED database: https://ec.europa.eu/tools/eudamed/#/screen/home

h/p/cosmos EUDAMED ID Economic Actor Manufacturer: SRN: DE-MF-000006147

7. Emergency dismount / emergency release

Danger!

General precaution and warning for emergency dismount and /or emergency release:
In case there is a risk of a subject to become unconscious, there have to be sufficient professional staff available within the treatment room to handle the subject for emergency dismount.
The pull knob and slide in order to adjust the position of the fall stop cannot be re-adjusted in case the subject is unconscious. Thus a lowering of a subject with the help of the air pressure control valve may not work until a subject can reach a wheelchair position.

7.1. Device in working condition / subject unconscious

- Stop the treadmill if unweighting has been used together with a treadmill.
- Call a doctor.
- Call third person (or sufficient persons to handle and support the body-weight of the subject) in order to stabilize the subject.
- Lower the subject as described in the chapter “Application”.
- Render first aid.

7.2. Device in error condition (subject cannot be lowered by hand unit valve) / subject conscious

- Stop the treadmill if unweighting has been used together with a treadmill.
- Instruct subject that you will open the pneumatic circuit and the unweighting will be reduced immediately.
- Tell subject to hold handrails and call third person (or sufficient persons to handle and support the body-weight of the subject) in order to stabilize subject.
- Disconnect device from pressurized air supply.
- Unweighting will be reduced immediately!
- Help subject to open the vest and exit the treadmill.

7.3. Device in error condition (subject cannot be lowered by hand unit valve) / subject unconscious

- Stop the treadmill.
- Call a doctor.
- Call third person (or sufficient persons to handle and support the body-weight of the subject) in order to stabilize the subject.
- Instruct the third person that you will open the pneumatic circuit and the unweighting will be reduced immediately.
- Disconnect device from pressurized air supply.
- Unweighting will be reduced immediately!
- Open the vest and carry subject down from treadmill.
- Render first aid

Danger!

Connection to pressurized air supply has to be accessible for any user at any time!

8. Application body weight support

8.1. General functions

step	picture	description
1.	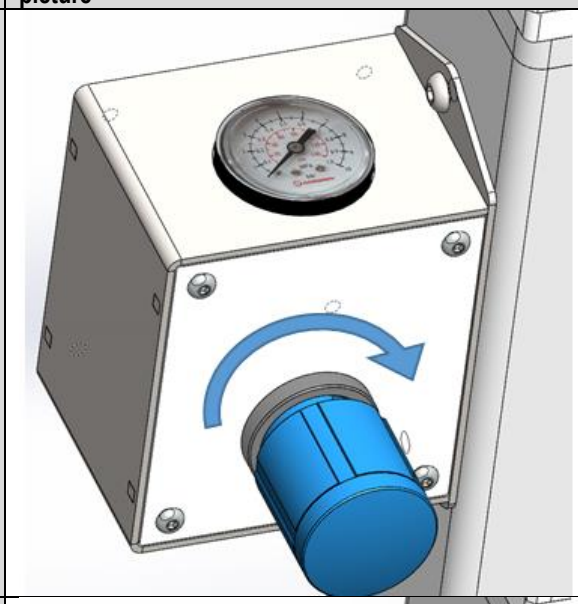	**Increase unweighting force** Turn control knob clockwise (pull knob if it is locked).
2.	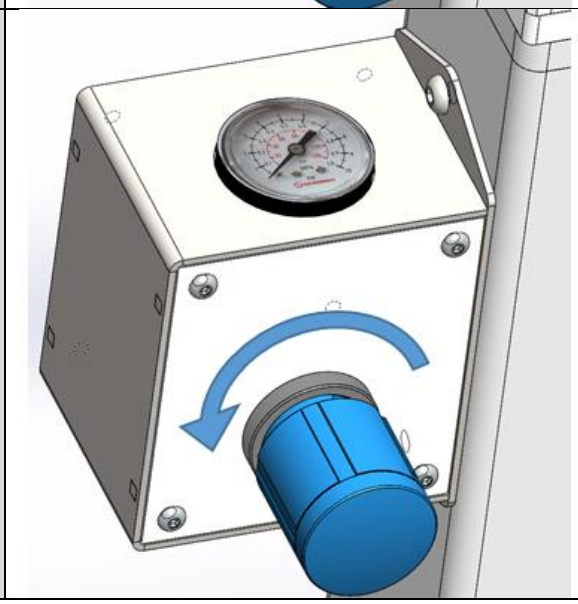	**Decrease unweighting force** Turn control knob counter-clockwise (pull knob if it is locked).

3.	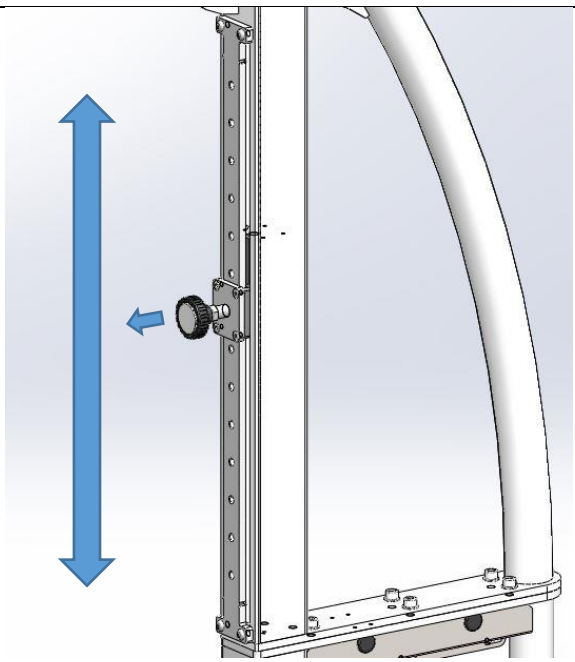	**Setting of fall stop** Pull knob and move slide up or down in order to adjust the position of the fall stop. ⚠ **Caution!** Always check correct position with subject! Subjects' knees should not touch running surface while suspended in vest / harness. ⚠⚠ **Warning!** The pull knob and slide in order to adjust the position of the fall stop cannot be re-adjusted in case the subject is unconscious. Thus a lowering of a subject with the help of the air pressure control valve may not work until a subject can reach a wheelchair position. In case there is a risk of a subject to become unconscious, there have to be sufficient professional staff available within the treatment room to handle the subject for emergency dismount.
4.	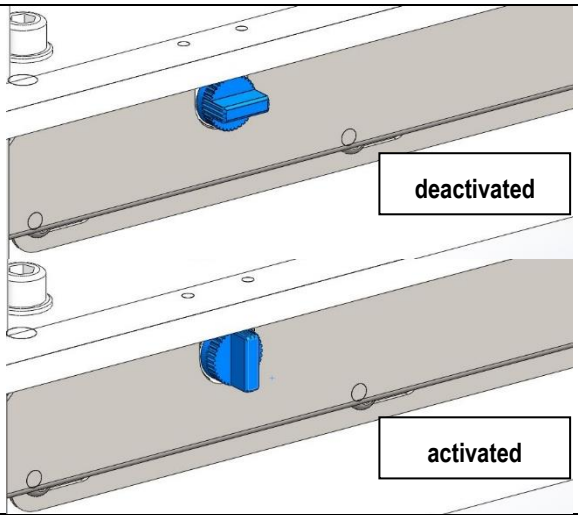	**Air cushion / fall stop mode** (optional) Air cushion mode: no continuous air supply necessary (reduces noise / energy consumption). Deactivated: knob in horizontal position Activated: knob in vertical position ⚠⚠ **Warning!** Before deactivation of air cushion / fall stop mode, make sure the system is not under pressure. **Hand unit valve turned counter-clockwise completely!**

8.2. Preventive maintenance

step	picture	description
1.	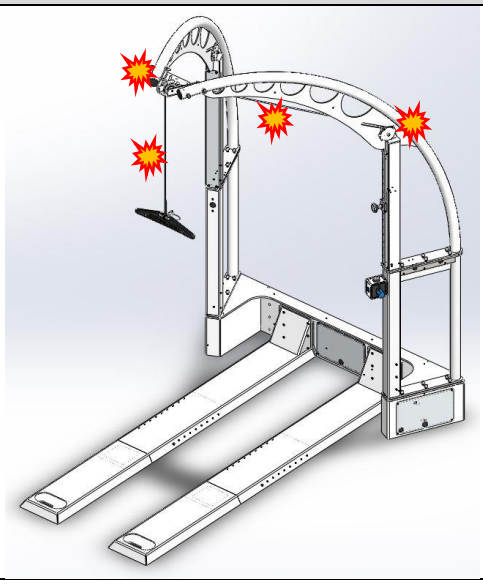	Check rope for wear and tear. Check rollers for free motion. Check accessible tubes and vest for wear and tear. **Warning!** In case of any wear and tear or malfunction the device has to be set out of order until the worn component is replaced. **Warning!** Rope has to be replaced by an authorized h/p/cosmos technician at least every 12 months or earlier in case of any visible or assumed damage.

8.3. Putting on unweighting vest, shorts and chest belt

step	picture	description
1.		The vest supports from the waist. Before putting on vest, extend all straps. Tight and nonslip cloths reduce riding up. Tight fit provides greater support and is more comfortable. http://ergolet.gofiqr.com/ERDyFQ Always read instructions and warnings also of all accessories used! **Warning!** For any application where falling might cause an unacceptable risk, the chest-belt safety harness cos14903-04-xx has to be applied additionally.
2.		Optionally to the vest, different size neoprene tights/shorts can be utilized for moderate unweighting: cos10095-neo-S cos10095-neo-M cos10095-neo-L Always read instructions and warnings also of all accessories used! **Warning!** For any application where falling might cause an unacceptable risk, the chest-belt safety harness cos14903-04-xx has to be applied additionally.

3.	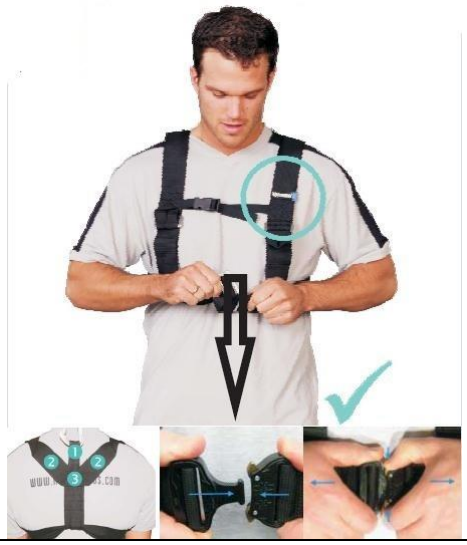	<u>Put on chest belt cos14903-04-xx</u> Put on the chest belt so that the h/p/cosmos logo is at the front. In order to attach the carabiner, put the vertical belt (1) below the shoulder belts (2), facing the body, thereby unloading the seam at the joint (3). **Warning!** If the chest belt is put on differently, it may loosen and it may not prevent from falling. Always read instructions and warnings also of all accessories used!

8.4. Treatment / Unweighting

step	picture	description
1.	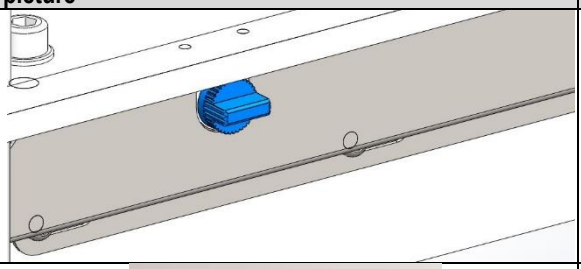	<u>Deactivate air cushion mode.</u> Turn knob in horizontal position. **Warning!** Turn knob slowly and make sure the system is not under pressure
2.		Connect device to active compressed air supply. **Warning!** Before connection to active compressed air supply, make sure the system is not under pressure. **Hand unit valve turned counter-clockwise completely!**
3.	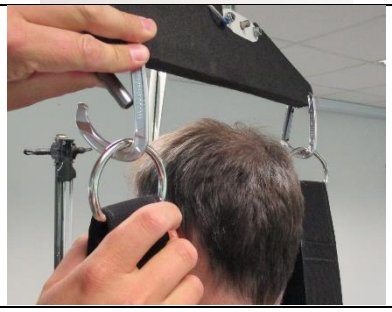	<u>Connect unweighting vest to unweighting bar</u> Use the supplied karabiners for connection, in case of small subjects elongate with extensions.
4.		**Warning!** <u>Safety harness chest belt cos14903-04-xx</u> For any application where falling might cause an unacceptable risk, the safety harness has to be applied additionally.
5.	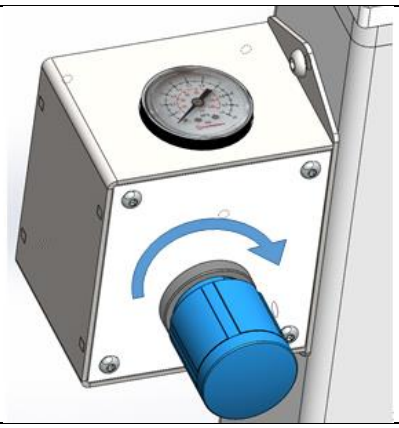	<u>Lift subject (from wheelchair)</u> Turn control knob clockwise **<u>carefully</u>**, if possible ask the subject to support the process. The less force needed to lift the subject, the less the vest rides up.

6.	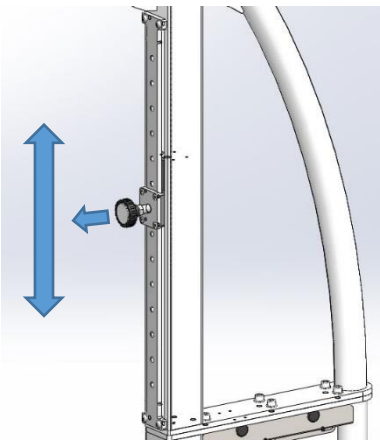	<u>Set emergency stop position</u> When subject stands upright, pull knob and move slide down to one step before lowest possible position. Now the subjects' vertical movement is limited. **Warning!** The pull knob and slide in order to adjust the position of the fall stop cannot be re-adjusted in case the subject is unconscious. Thus a lowering of a subject with the help of the air pressure control valve may not work until a subject can reach a wheelchair position.
7.	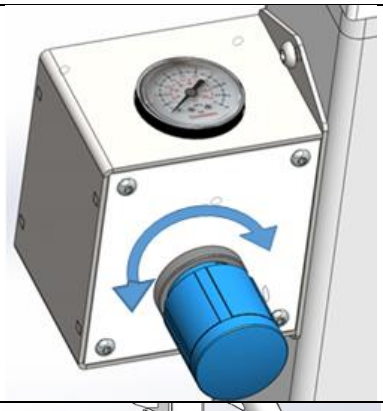	<u>Set unweighting force</u> Adjust the unweighting force by turning the control knob until the desired value is reached by the pointer. Start exercise. **Warning!** Keep subject under permanent supervision.
8.	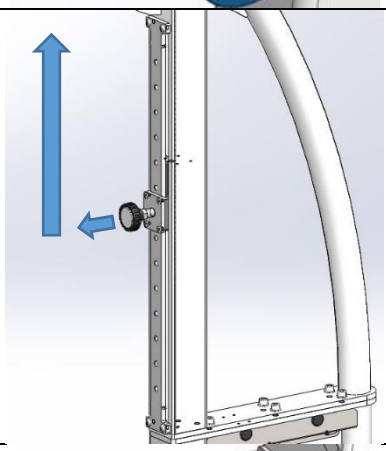	<u>Set back emergency stop position</u> Instruct subject to stand on the feet and hold tight to the treadmill handrails. Pull knob und push slide upwards completely. Now the subjects' vertical movement is free.
9.	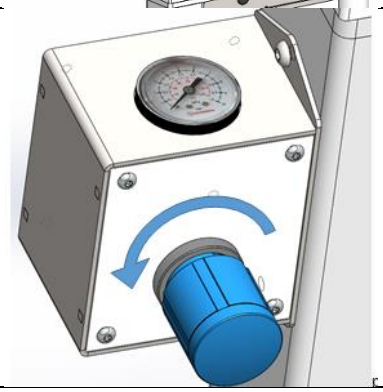	<u>Lower subject (back to wheelchair)</u> After exercise, turn control knob counter-clockwise carefully to reduce unweighting completely. If possible, ask the subject to support the process.

10.	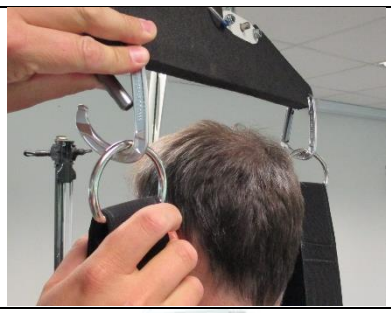	<u>Release subject from unweighting bar</u> Make sure the subject either can stand stabile and firm or the subject is sitting in the wheelchair. Unlock karabiners. Remove vest and/or chest belt and/or neoprene tights/shorts.
11.		<u>Cleansing</u> The manufacturer of the unweighting vest recommends cleansing with a diluted disinfectant. The device itself should be cleaned according to the regulations of your institution. h/p/cosmos recommends Bacillol AF, order number [cos12179-01].

9. Application fall prevention and safety stop (optional)

step	picture	description
1.	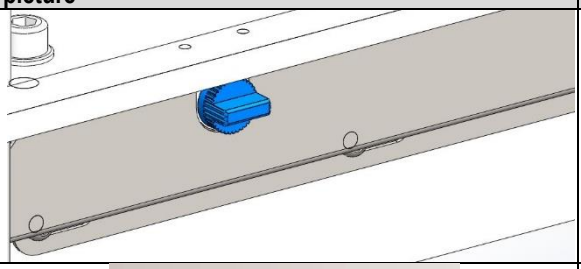	<u>Deactivate air cushion mode.</u> Turn knob in horizontal position. **Warning!** Turn knob slowly and make sure the system is not under pressure
2.		Connect device to active compressed air supply. **Warning!** Before connection to active compressed air supply, make sure the system is not under pressure. **Hand unit valve turned counter-clockwise completely!**
3.	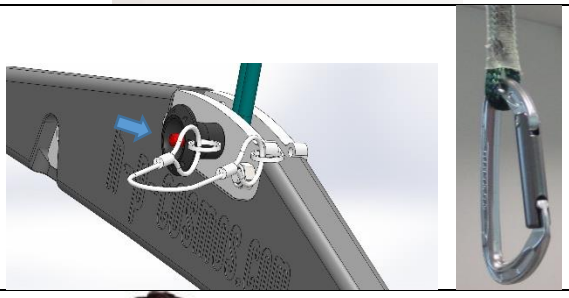	<u>Remove unweighting bar</u> Push red button to remove bolt. Attach one hook / carabiner to rope eye directly.
4.		<u>Put on chest belt</u> Put on the chest belt so that the h/p/cosmos logo is at the front. In order to attach the carabiner, put the vertical belt (1) below the shoulder belts (2), facing the body, thereby unloading the seam at the joint (3). **Warning!** If the chest belt is put on differently, it may loosen.

5.	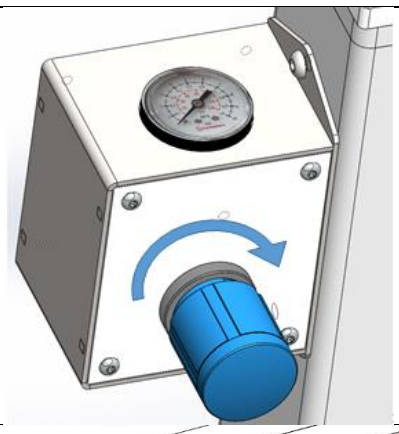	<u>Move up rope</u> Use very light pressure in order to pull rope eye up to desired position. After step 4 the rope should be neither too tight nor too loose.
6.	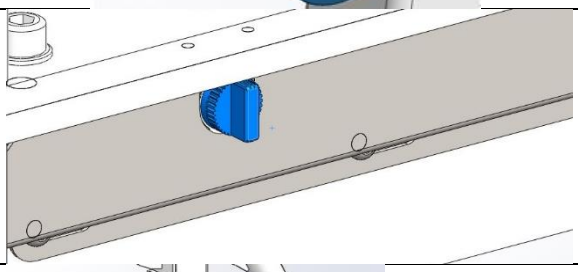	<u>Use air cushion / fall stop mode</u> Turn knob in vertical position in order to close the valve. The rope eye will remain in the set position. Readjust if necessary.
7.	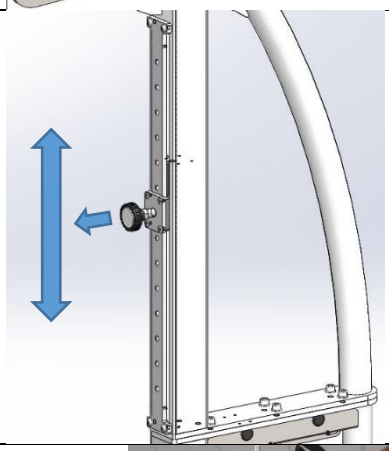	<u>Set emergency stop position</u> When subject stands upright, pull knob and move slide as low as possible without activating the safety stop. Now the subjects' vertical movement is limited. In case of falling, the treadmill will stop.
8.		<u>Check function with subject</u> Explain function to subject. Let subject go down as low as possible. Subjects' knees must not touch running surface while suspended in vest / harness UserTerminal shows "pull stop" message.
9.		<u>Cleansing</u> The manufacturer of the unweighting vest recommends cleansing with a diluted disinfectant. The device itself should be cleaned according to the regulations of your institution. h/p/cosmos recommends Bacillol AF, order number [cos12179-01].

10. Trouble shooting

step	picture	description
1.		<u>Rope too short</u> (unweighting bar touching subject's head) Use extensions (see picture).
2.	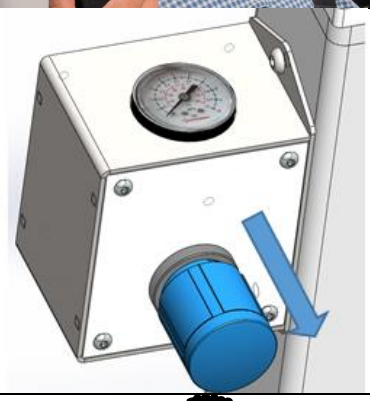	<u>Control knob does not move</u> Knob is locked. Pull slightly to unlock. Please note: If knob in drawn off completely, simply push it on again.
3.	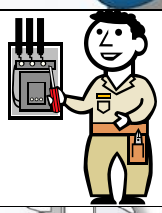	<u>Rope chafes</u> Call technician
4.	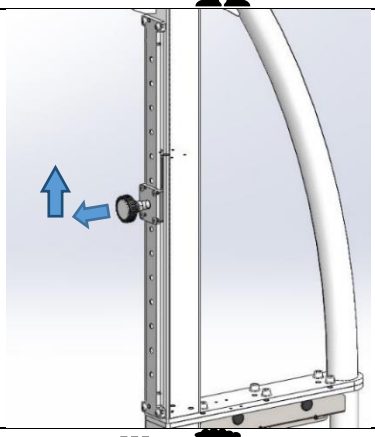	<u>Optional emergency stop</u> <u>Pull stop is activated during training</u> Fall Stop position may be too low Move up slide for one position
5.	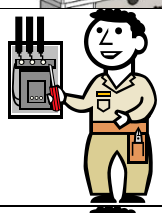	<u>Optional emergency stop</u> <u>Pull stop does not work</u> Check cabling Call technician
6.	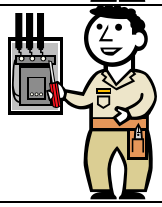	<u>Increased loss of pressure</u> Call technician

11. Name plate

product family:	**body weight support device h/p/cosmos (airwalk)**		
model:	**airwalk® ap**		
class:	**S, I**	**compressed air supply:**	**max. 10 bar**
max. patient weight: 250 kg / 551 lbs			
max. support weight: 90 kg / 198 lbs			

(21)cos30028-0001
(11)141111
(01)4050588002305

2014-11-11

h/p/cosmos

h/p/cosmos sports & medical gmbh
83365 Nussdorf-Traunstein / Germany

SN cos30028-0001

made in germany
service@h-p-cosmos.com

12. Technical data

Standard data in the box, optional solutions at extra charge under the box.

12.1. Measurements airwalk ap

Length	240 cm	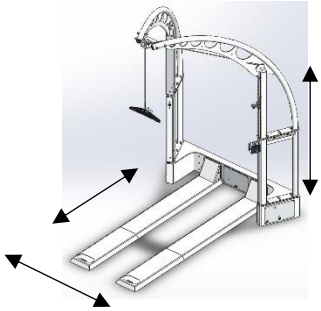
Width	180 cm	
Height	274 cm	
Mass	305 kg	
Weight load	≤ 2.5 kN/m² (incl. treadmill)	
Packaging	On request	
Optional solution for low ceiling height: on request		
Optional solution for subjects > 200 cm: on request		

12.2. Measurements airwalk lt

The measurements of airwalk lt depend on the room situation and the way of installation for the ceiling mount pulleys.

12.3. Performance data

Support	dynamic support approx. 0 … 90 kg (10 bar input pressure) 0 … 70 kg (8 bar input pressure) 0 … 50 kg (6 bar input pressure)	
Vertical range	75 cm (approx.)	
Rotation	360°	
Optional solution for more subject weight: 0 … 120 kg (less differentiated adjustment)		
Optional solution for more subject weight: 0 … 160 kg (less differentiated adjustment)		
Optional solution for more subject weight: 0 … 240 kg (less differentiated adjustment)		

12.4. Subject data

Min. height	150 cm (options available)	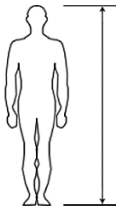
Max. height	200 cm (options available) restrictions f. inclination >10%	
Min. weight	15 kg	
Max. weight	250 kg (options available)	
Optional solution for smaller subjects: extensions for min subject height < 150 cm.		
Optional solution for subjects > 200 cm: on request		
Optional solution for heavier subjects: on request		

12.5. Control unit

Display	Analog manometer (options on request)	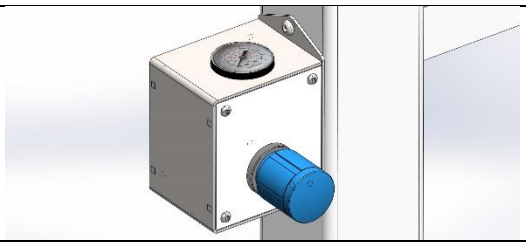
Operation	Control knob (options on request)	
Accuracy	5 kg (options on request)	

12.6. Accessories included

Warning!

Always read instructions and warnings also of all accessories used!

Device folder	Including instructions for use, etc.	
Unweighting vest	Size M chest 93 … 105 cm cos10095-vest-M (options available)	
Safety harness chest belt	Size M chest 85 … 115 cm cos14903-04-M (with option emergency stop)	

Option for smaller subjects:	unweighting vest	size XXS	chest 62…75 cm	cos10095-vest-XXS
Option for smaller subjects:	unweighting vest	size XS	chest 76…84 cm	cos10095-vest-XS
Option for smaller subjects:	unweighting vest	size S	chest 85…92 cm	cos10095-vest-S
Option for bigger subjects:	unweighting vest	size L	chest 106…114 cm	cos10095-vest-L
Option for bigger subjects:	unweighting vest	size XL	chest 116…130 cm	cos10095-vest-XL
Option for smaller subjects:	safety harness	size XXS	chest 45…65 cm	cos14903-04-XXS
Option for smaller subjects:	safety harness	size XS	chest 55…75 cm	cos14903-04-XS
Option for smaller subjects:	safety harness	size S	chest 65…95 cm	cos14903-04-S
Option for bigger subjects:	safety harness	size L	chest 105…135 cm	cos14903-04-L
Option for bigger subjects:	safety harness	size XL	chest 125…155 cm	cos14903-04-XL
Option for agile subjects:	neoprene shorts	size S	waist 55…92 cm	cos10095-neo-S
Option for agile subjects:	neoprene shorts	size M	waist 93…105 cm	cos10095-neo-M
Option for agile subjects:	neoprene shorts	size L	waist 106…114 cm	cos10095-neo-L
Replace after two years of usage or 4 years after manufacturing or earlier in case of any visible or assumed damage.				

12.7. Compatible treadmills

treadmill h/p/cosmos 150/50	
treadmill h/p/cosmos 170-190	
treadmill h/p/cosmos 170-190 3p	
other treadmills on request and only after written confirmation through h/p/cosmos	

12.8. Environmental conditions

Transport and storage		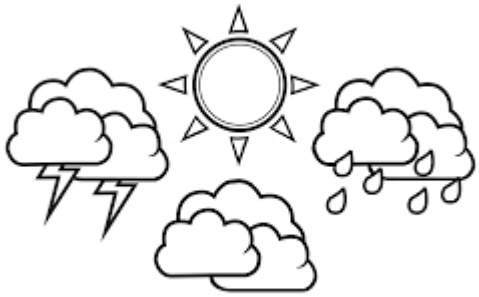
Temperature	-30 … +50°C	
Humidity	0 … 95 % without condensation	
Barometric pressure	700 … 1060 hPa	
Operation		
Temperature	+10 … +30°C	
Humidity	0 … 70 % without condensation	
Barometric pressure	700 … 1060 hPa	

12.9. Normative data

Usage class (acc. EN 20957)	Class S (prof./commercial) Class I (special needs)	

Mechanical safety	EN 20957-1	§
Pneumatic safety	IEC 60601-1, clause 9.7	
Requirement for CE conformity	MDR (EU) 2017/745 EU directive 2006/42/EC	
Risk class (acc. to MDR)	Class I	

12.10. Further data

comp. air coupling	according to ISO 4414	...
comp. air supply	max. 10 bar according to ISO 8573-1:2010	
compressor	optionally available	
rope	PES/PE-rope, Ø 6mm	
frame color	pure white RAL 9010	
noise emission	max. 50dB	
Option for other frame color: on request		

13. Spare parts and consumables

Since all kinds of installation and repair work and most maintenance work are to be performed only by trained and authorized technicians, information about spare parts and consumables is only available through the h/p/cosmos service team:
service@hpcosmos.com
https://www.hpcosmos.com/en/products/service

14. Intended / expected lifetime

Base frame	10 years	These data are only valid for the intended use, provided, that the recommended maintenance intervals are kept and every maintenance and repair work is carried out by authorized h/p/cosmos technicians.
Rollers	5 years	
Pneumatic components	3 years	
Wests / Pants	2 years usage 4 years max.	
Rope	1 year	

15. Disposal

Upon request and at the expense of the client, h/p/cosmos might perform the disposal of old or defective devices. Please contact service@hpcosmos.com for a detailed offer.
Our devices consist of powder-coated and galvanized metals from different producers and qualities, stainless steel parts, aluminum parts, plastics, rubber, electronics with cables, boards and condensers as well as batteries. These materials can be recycled at the official municipal recycling depot or by authorized disposal companies.

16. Installation

step	picture	description
1.		Material needed: – set of allen keys (3 .. 10mm) – 2x fork wrench, 17mm – 1x fork wrench, 19mm – 2x fork wrench, 24mm – Torque wrench 85Nm with 10mm Allen key – some cardboard – second person for support (steps 4+5)
2.		Compare the delivery note with the delivered device. All parts (device, accessories, device folder, etc.) have to be complete and without damage.
3.	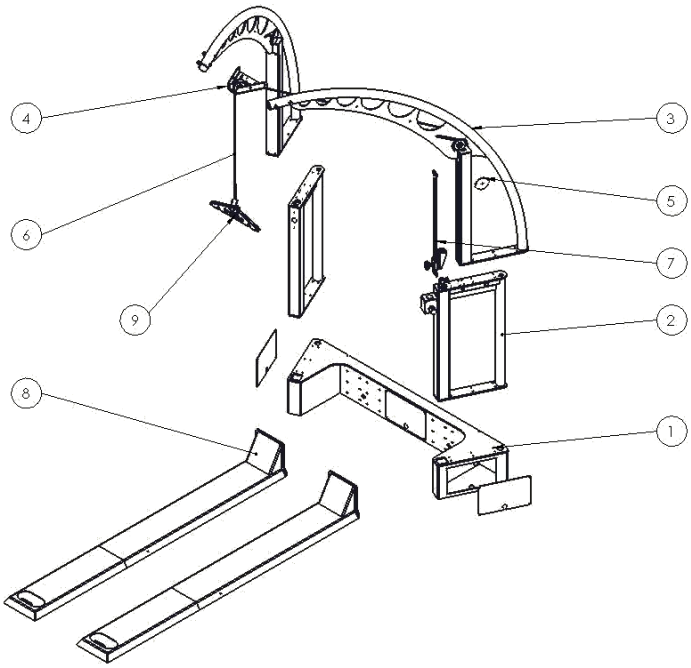	<u>Overview</u> (1) Component box (2) 2x adapter (3) 2x arch (4) Cable guide (5) Pulley + cover (6) Rope (7) Adjustable stop (8) 2x rail (9) Unweighting bar NOTE: the adapter with attached hand unit as well as the arch with adjustable stop is placed on the right-hand side in standard configuration (as depicted).

4.	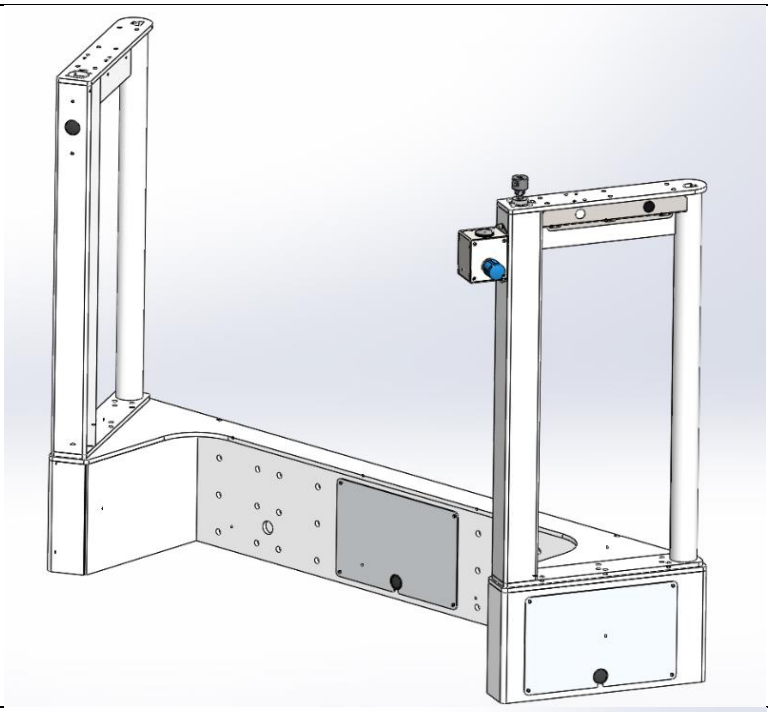	Place component box (1) on a clean and level surface. Put adapters (2) on top of the component box and fix with 12x M10x25 cylinder head screws with washers. ATTENTION: slide the 6mm tubes through the corresponding holes of the component box.
5.	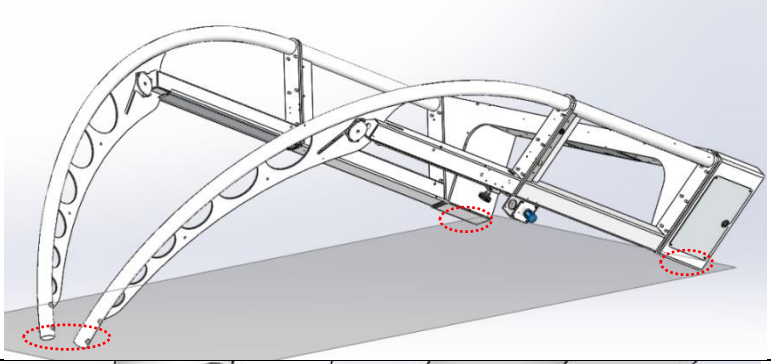	Put cardboard padding under the marked areas of component box and arch tips and tilt box so that the arches (3) can be fixed with 12x M10x25 cylinder head screws with washers while the box is held by a second person.
6.	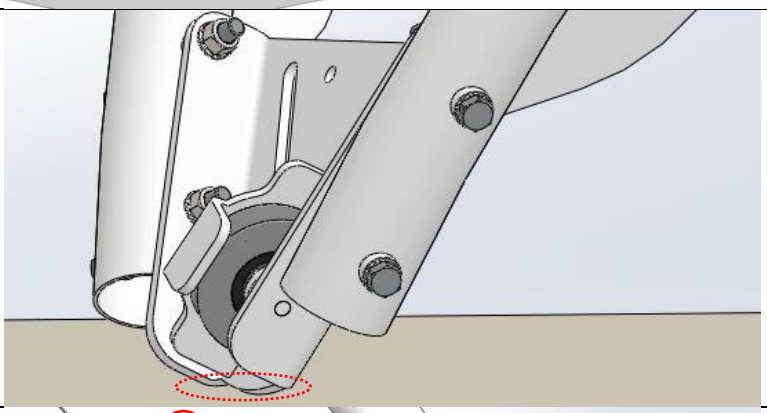	Connect the arch tips with the cable guide module (4) using the 4x M10x100 hex head screws, 8x washers and stop nuts.
7.	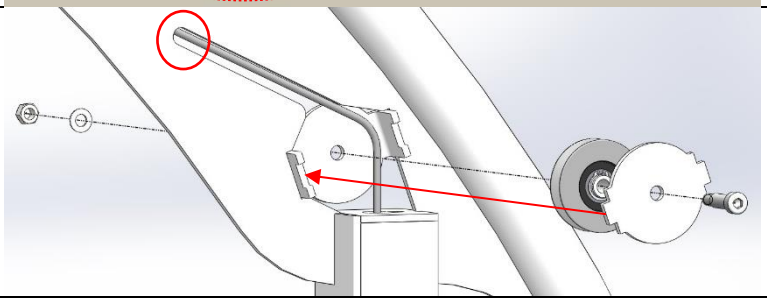	Pull rope through arch square tube to exit through the top hole. Assemble arch, pulley and pulley cover plate as depicted (fit cover plate noses in corresponding notches).

8.	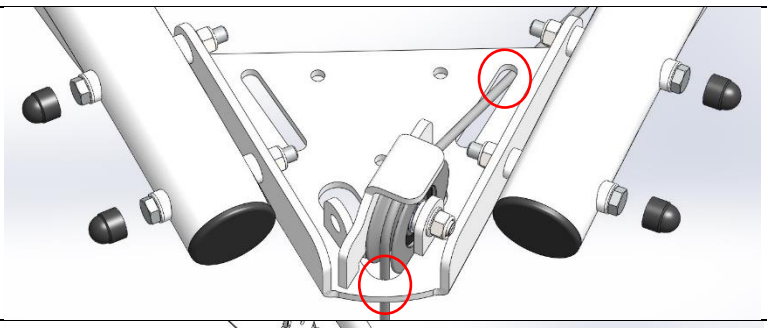	Pull rope through the cable guide module (depicted: unweighting unit on right-hand side). Cover the screw heads with the plastic caps. Tilt the device back up again.
9.	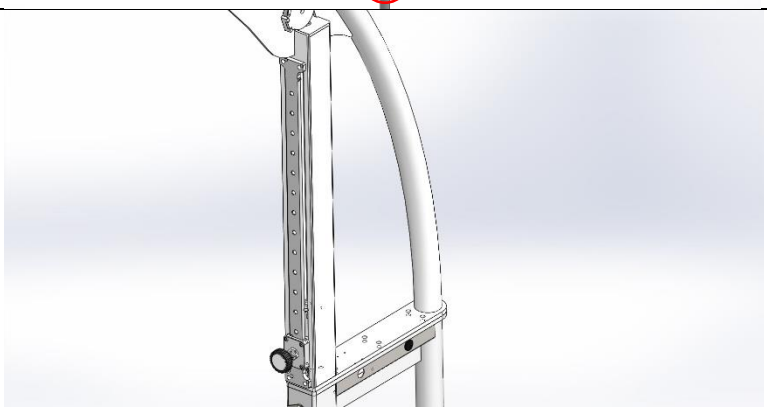	Insert the adjustable stop module and fix with 4x M8x25 lens-head screws. NOTE: the rope has to run through the slot in the middle of the slide! In case that the device is equipped with the optional safety stop switch see chapter “options” for further instructions.
10.	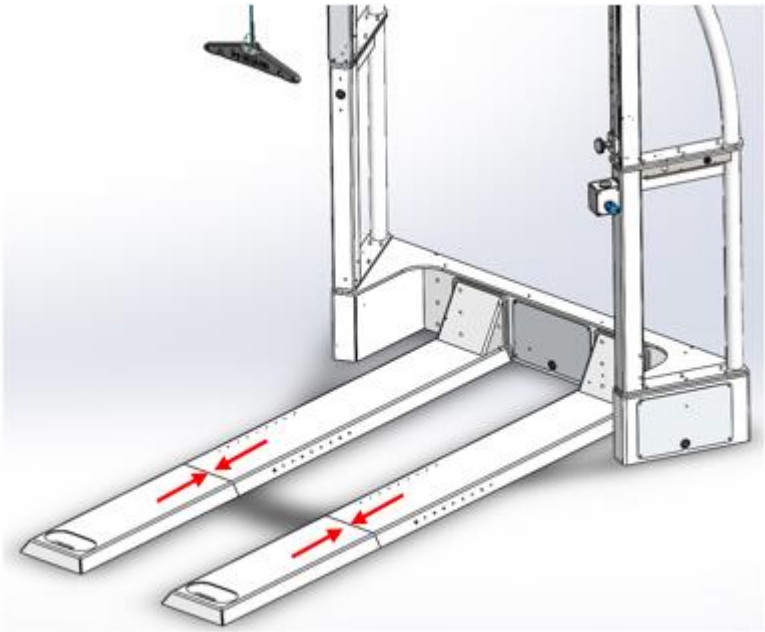	Place the pair of rails in front of the component box. Adjust the gap between the front and back rail part according to the treadmill type, fix position with 4x M8x16 lens-head screw: 150/50 – no gap 170/65 – 20 cm gap 190/65 – 40 cm gap NOTE: to avoid collision risk with certain treadmill accessories (e.g. Zebris visual stimulation) it might be necessary to adjust the gap so that the treadmill inclination path is unblocked.
11.	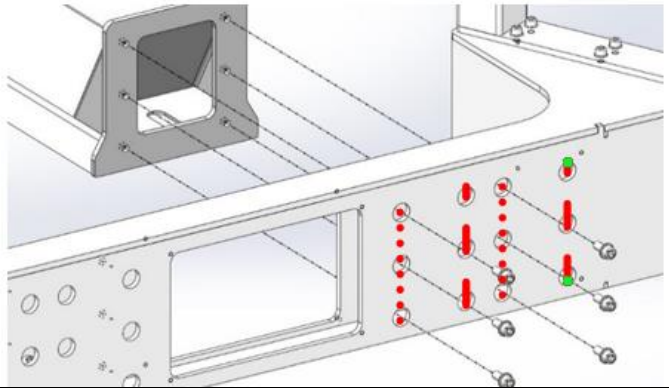	Adjust the rail distance according to treadmill type. Inner pair of holes (orange) for xx/50, outer pair (green) for xx/65 size. Attach rails to the component box using 12x M12x30 cylinder head screws with washers. Use 85 Nm torque.

12.	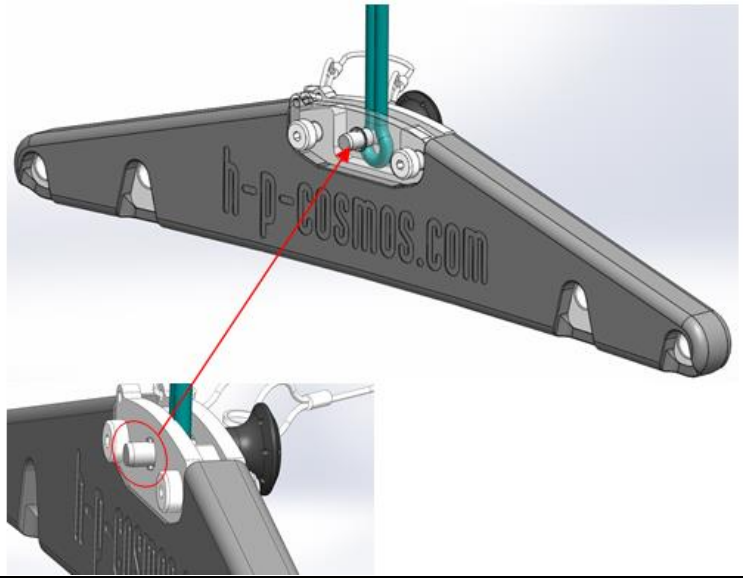	Connect rope eye to the unweighting bar with the locking pin. Press red button, put pin through hole <u>completely</u>, release red button. Make sure the detents prevent sliding out of the locking pin.
13.	without illustration	Perform function control. Use checklist from chapter: “maintenance”
14.	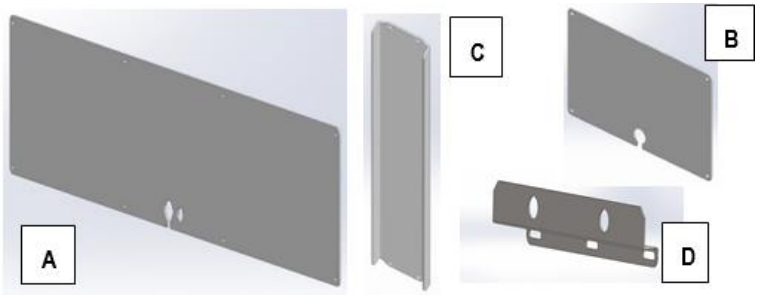	Mount cover sheets and plugs: - cover sheet component adapter backside (A) - 2x cover sheet component adapter (B) - cover sheet arch (C) - cover sheet cylinder connection (D)
15.		Connect potential equalization
16.	without illustration	Perform function control according to „maintenance“ checklist.

17. Pneumatic wiring

no.	picture	description
1.	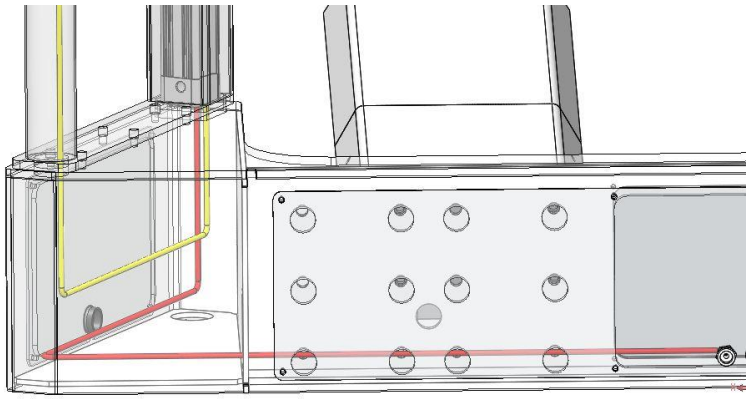	**Attention!** In this manual the black wire (cos11285) is shown in the colours yellow (2.45 m) and red (2.15 m) for illustration. Instruction: The red marked cable is led through the component holder airwalk ap (cos102304ral9010) into the adapter 275cm RH airwalk ap.
2.	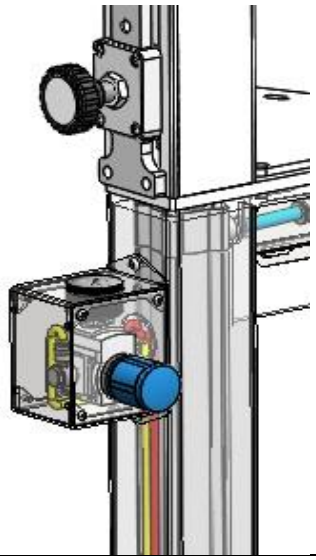	Then the red line is led along the cylinder (cos102480) into the valve body (cos103290).
3.	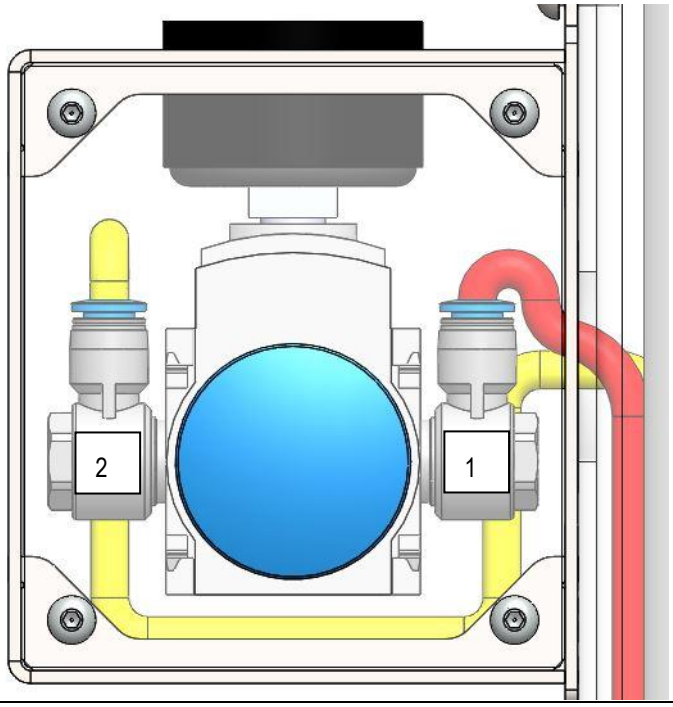	The line marked in red is connected to port 1 of the control valve airwalk ap Festo (cos102340). The yellow marked cable is connected to port 2 of the control valve airwalk ap Festo (cos102340). The ports are marked on the control valve airwalk ap Festo (cos102340) with the respective number.

4.	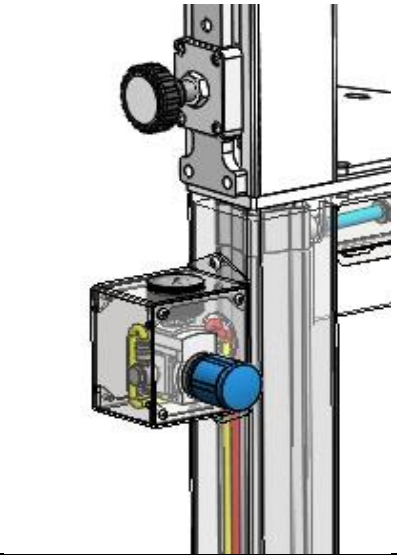	The yellow marked cable is routed via the adapter 275cm RH airwalk ap (cos102307-01ral9010) along the cylinder downwards into the component holder airwalk ap (cos102304ral9010).
5.	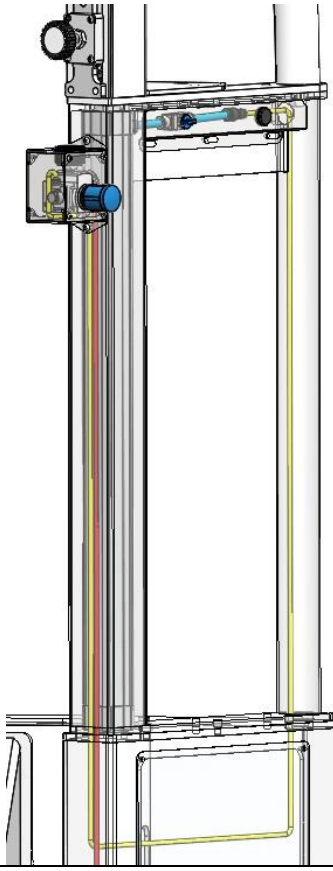	Then the yellow marked cable is led upwards through the component holder airwalk ap (cos102304ral9010) and via the adapter 275cm RH airwalk ap (cos102307-01ral9010). The cable is led outwards through the bore.
6.	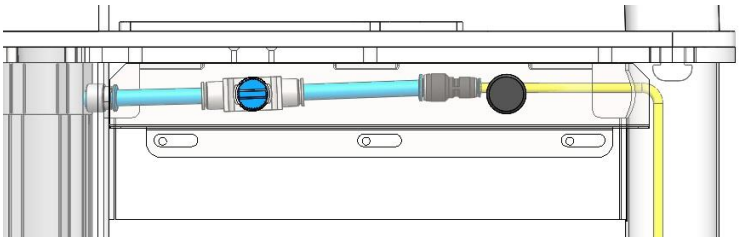	Connect the two blue lines (cos102333 compressed air hose 10mm yard ware) with cylinder 40 (cos102480), the shut-off valve airwalk ap (cos102393) and the plug connector straight 10-6 (cos103282). Connect the yellow cable to the 6mm connector of the tapered plug connector (cos103282).

7.	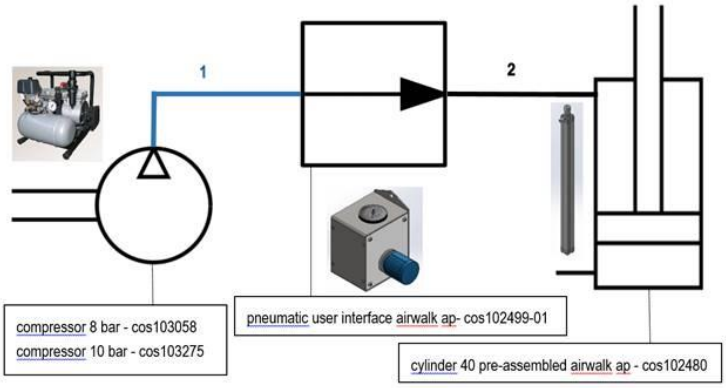	Schematic representation with circuit diagram symbols.

18. Options

no.	picture	description
8.	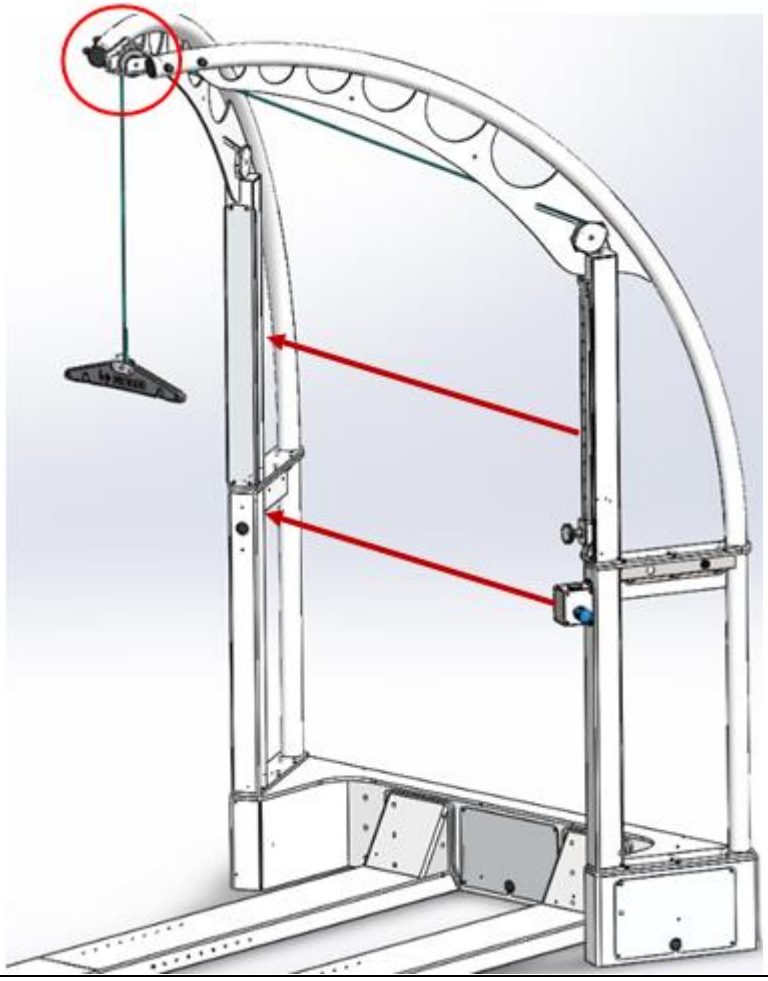	Installation of unweighting components on left side: - Adapter with hand-unit and adjustable stop to be mounted on left side - be aware of the correct rope alignment along arch and cable guide module.
9.		Air cushion / fall stop mode: - remove supply tube from cylinder and cut at 92mm - insert air cushion valve - Fix distance bolts to flange plate (cut thread if needed) - Screw valve on the distance bolts with 2x lens head screw M4x25 - Fix cable and tube with 3x cable tie

10.		Emergency stop: -Screw emergency stop switch in thread on the stop slide and fix the cable with a cable tie at the edge
	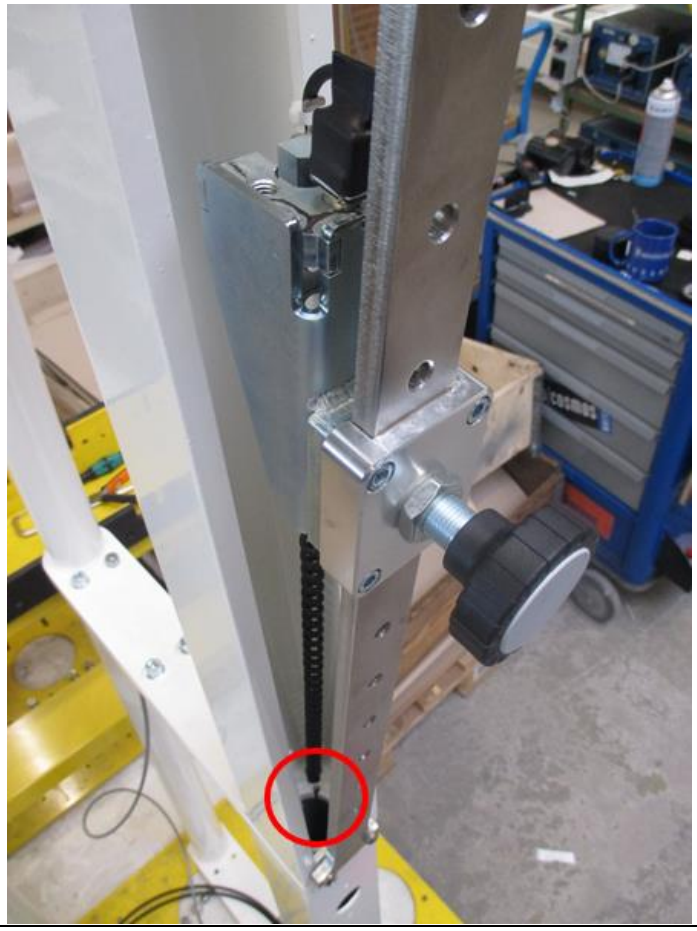	- Guide the cable through the hole at the top of the adapter. - Connect emergency Stop plug to treadmill. Position of socket depends on device (UserTerminal or front of device below motor cover).

11.	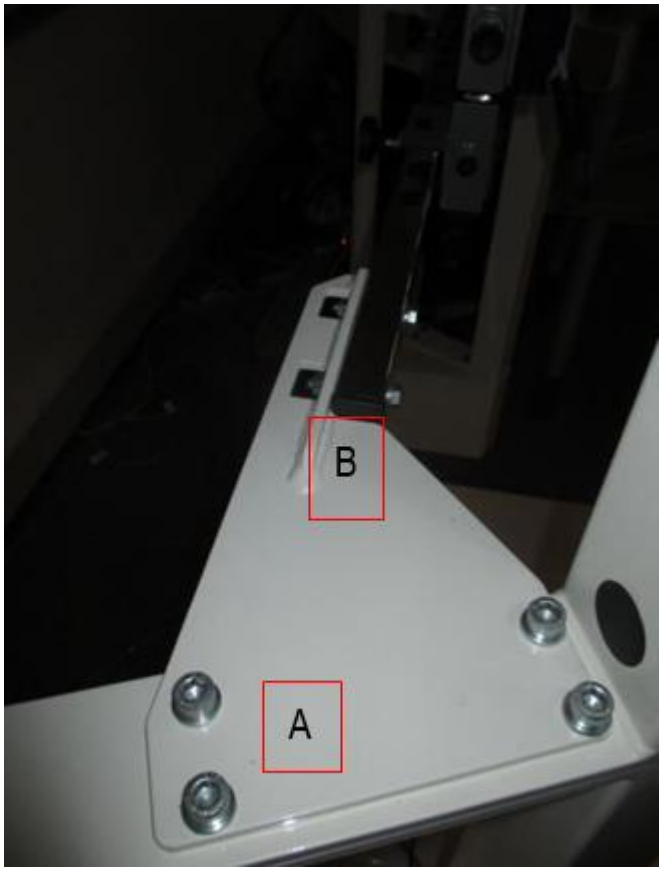 	robowalk expander front: article no.: cos30022-02va04 - mount connection flange to flange plate (use 8x M10x30) (A) - mount robowalk horizontal bar to connection flange (B)

19. Labelling

Label	order number and description	position on the device
Name plate 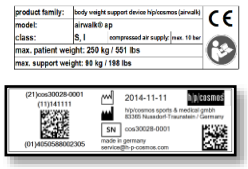	To be placed on the component box front, 20mm from top edge in the upper right corner	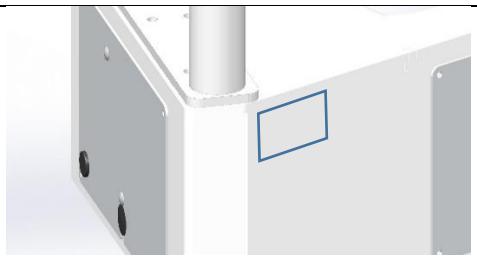
Short instructions unweighting: CAUTION/WARNING and Application “body weight support”	cos102564-01-en “short instructions” To be placed on the outer side, 20mm form the bottom edge of the “arch”.	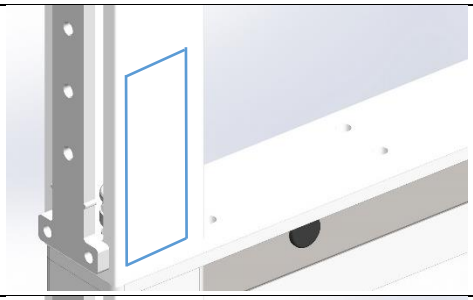
Emergency stop	cos102564-01-en “emergency stop” To be placed 10mm on top of “short instructions” (only in case option is installed)	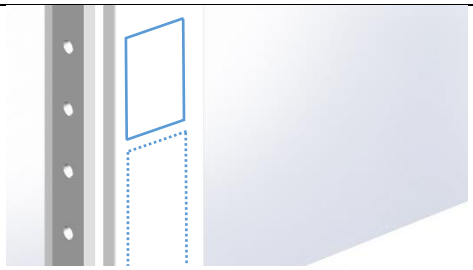
	cos102564-01-en “operating PUI” To be placed just around the turning knob.	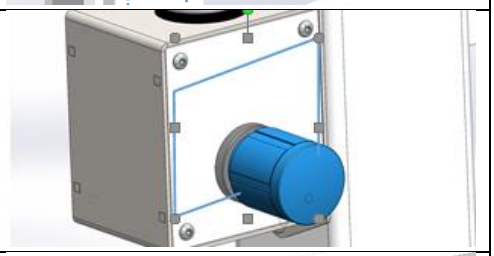
	cos102564-01-en “air cushion mode” To be placed 20mm right of the air cushion / fall stop valve.	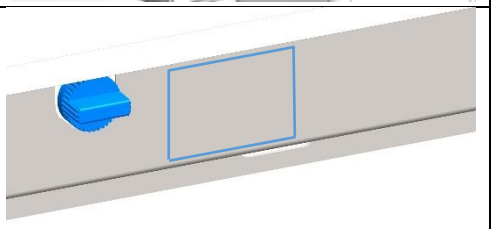

	"scale kg/lbs PUI" To be placed just around the manometer. scale range: 100 kg: cos102415-01 150 kg: cos103489-01 200 kg: cos103950 300 kg: cos103951	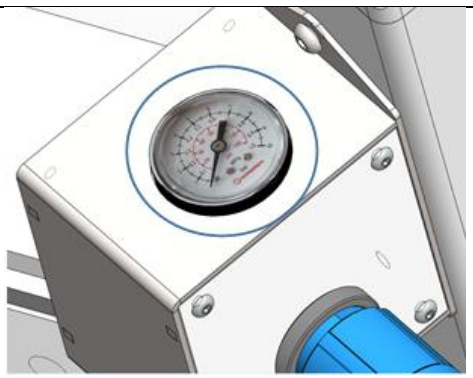
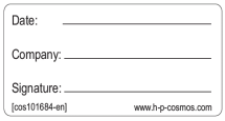	cos101684-01 "rope exchange" After rope exchange fill out the label and attach it to the corresponding position on cos102564-01-en "short instructions"	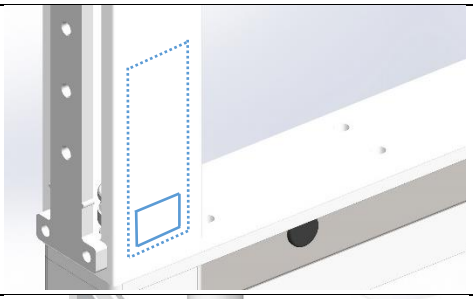
	cos10144-01 „address label" to be placed on right adapter 20mm above flange plate	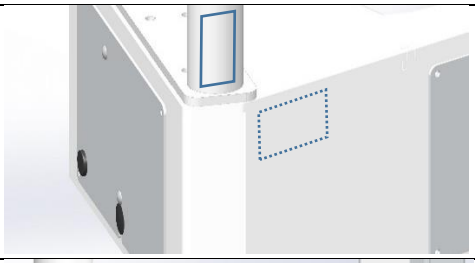
h/p/cosmos®	cos10941 „label h/p/cosmos blue" to be placed on stiffening plate of adapter without cylinder, outside, centered	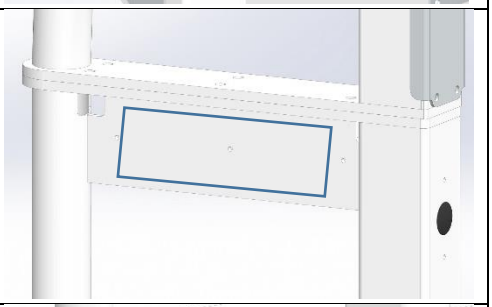
airwalk®	cos102192 „label airwalk plotted" to be placed on cover sheet of component adapter base plate, centered	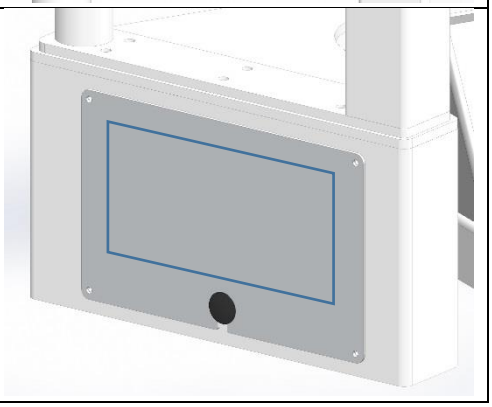

20. Packing

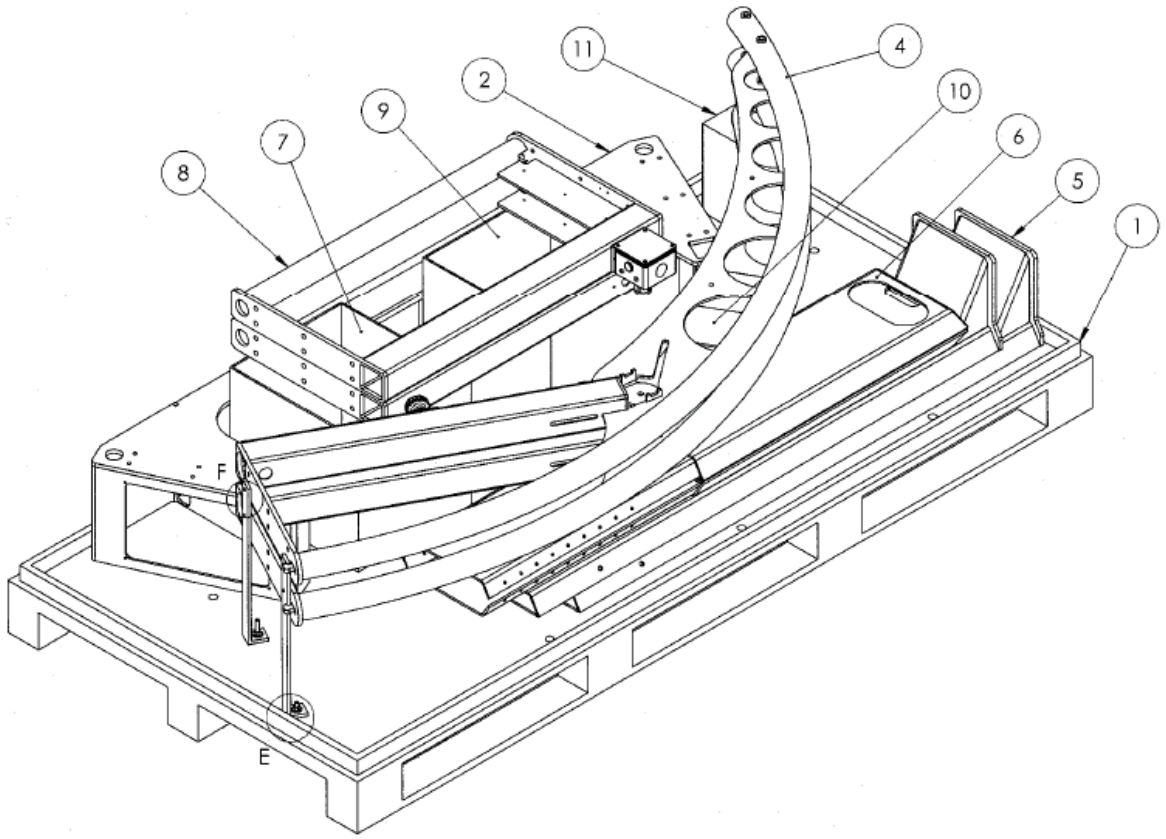

Packing on pallet: isometric view

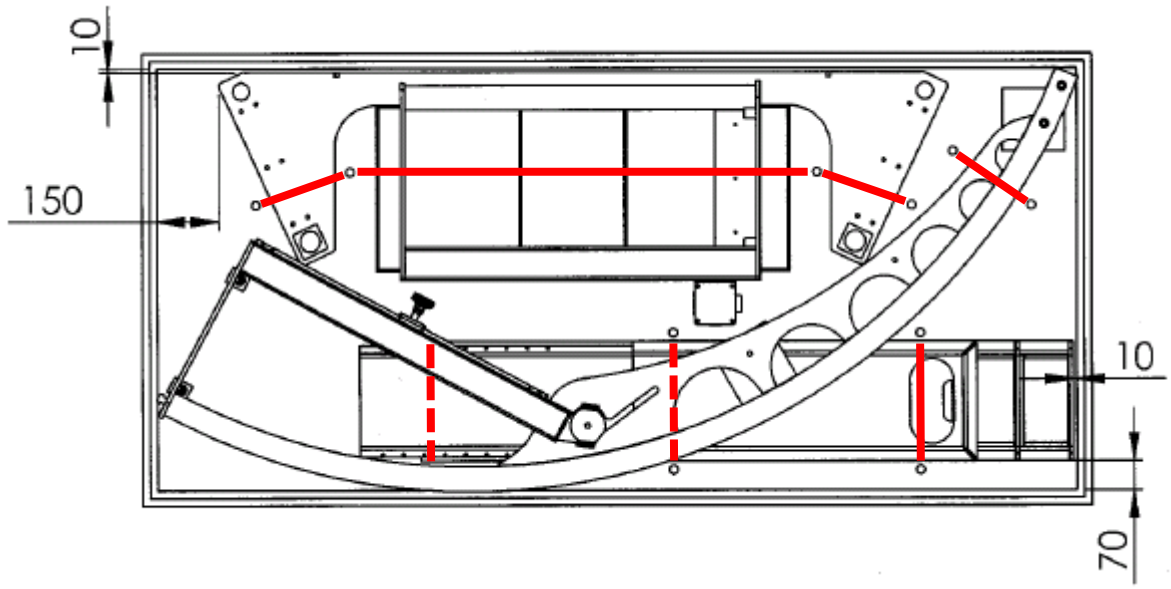

Packing on pallet: top view (fixation straps in red, dotted lines when covered by components)

21. Maintenance

General			
Serial number		Date	
Technician		Company	

Checklist		Signature
1. Device cleaned (incl. surfaces)		
2. Labels checked (replaced if needed)		
3. Rope replaced (signed label placed on device – blank label in device folder)		
4. All tubes checked for wear and tear		
5. All screws fastened		
6. If applicable: compressor checked acc. to separate instructions		
7. Function control performed:	Check	
- All caps and covers fixed and in position		
- Piston rod (1.) moves freely		
- Pulleys (2.) move freely		
- Rope (3.) does not chafe		
- Unweighting force adjustable via hand unit (4.)		
- Slide (5.) is moveable all the way from top to bottom		
- Locking pin (5.) locks in sliding rail holes		
- Safety stop stops treadmill (in case option is included!)		
- Treadmill parts and accessories do not collide when inclined		
- Hand unit: „0 kg“ mark coincides with „1 bar“ mark on manometer		

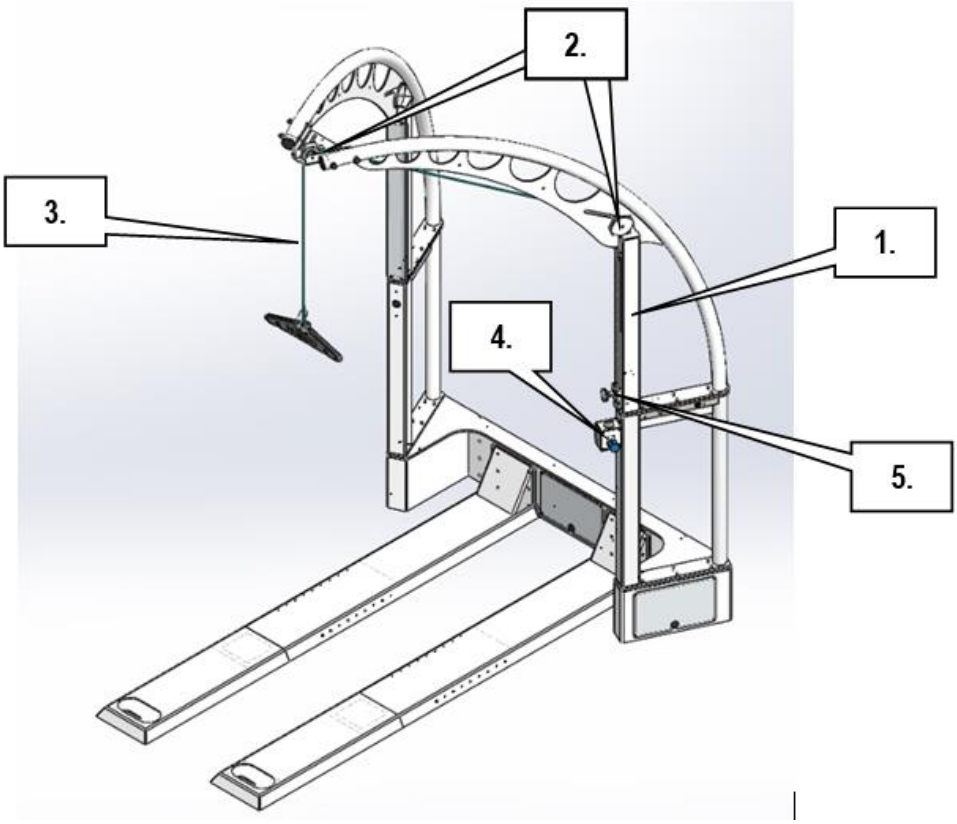

22. Contact

For any service or sales enquiries, please have the model type and serial number of your device ready.
For service support, we recommend using MS Teams or Skype with webcam.

Service

phone	+49 18 05 16 76 67	(0.14€/min from German landlines, max. 0.42€ from German mobile networks)
fax	+49 18 05 16 76 69	
email	service@hpcosmos.com	
Skype	@hpcosmos.com (search & select name)	

Sales

phone	+49 18 05 16 76 67	(0.14€/min from German landlines, max. 0.42€ from German mobile networks)
fax	+49 18 05 16 76 69	
email	sales@hpcosmos.com	
Skype	@hpcosmos.com (search & select name)	

h/p/cosmos sports & medical gmbh
Am Sportplatz 8
DE 83365 Nussdorf-Traunstein, Germany

phone	+49 18 05 16 76 67	(0.14€/min from German landlines, max. 0.42€ from German mobile networks)
fax	+49 18 05 16 76 69	
email	email@hpcosmos.com	
web	www.hpcosmos.com	